TEXAS INSTRUMENTS

Data sheet acquired from Harris Semiconductor
SCHS065B – Revised October 2003

CD4098B Types

CMOS Dual Monostable Multivibrator

High-Voltage Types (20-Volt Rating)

■ CD4098B dual monostable multivibrator provides stable retriggerable/resettable one-shot operation for any fixed-voltage timing application.

An external resistor (R_X) and an external capacitor (C_X) control the timing for the circuit. Adjustment of R_X and C_X provides a wide range of output pulse widths from the Q and $\overline{Q}$ terminals. The time delay from trigger input to output transition (trigger propagation delay) and the time delay from reset input to output transition (reset propagation delay) are independent of R_X and C_X.

Leading-edge-triggering (+TR) and trailing-edge-triggering (−TR) inputs are provided for triggering from either edge of an input pulse. An unused +TR input should be tied to V_{SS}. An unused −TR input should be tied to V_{DD}. A RESET (on low level) is provided for immediate termination of the output pulse or to prevent output pulses when power is turned on. An unused RESET input should be tied to V_{DD}. However, if an entire section of the CD4098B is not used, its RESET should be tied to V_{SS}. See Table I.

In normal operation the circuit triggers (extends the output pulse one period) on the application of each new trigger pulse. For operation in the non-retriggerable mode, $\overline{Q}$ is connected to −TR when leading-edge triggering (+TR) is used or Q is connected to +TR when trailing-edge triggering (−TR) is used.

The time period (T) for this multivibrator can be approximated by: $T_X = \frac{1}{2} R_X C_X$ for $C_X \geqslant 0.01\ \mu F$. Time periods as a function of R_X for values of C_X and V_{DD} are given in Fig. 8. Values of T vary from unit to unit and as a function of voltage, temperature, and $R_X C_X$.

The minimum value of external resistance, R_X, is 5 kΩ. The maximum value of external capacitance, C_X, is 100 μF. Fig. 9 shows time periods as a function of C_X for values of R_X and V_{DD}.

The output pulse width has variations of ±2.5% typically, over the temperature range of −55°C to 125°C for C_X=1000 pF and R_X=100 kΩ.

For power supply variations of ±5%, the output pulse width has variations of ±0.5% typically, for V_{DD}=10 V and 15 V and ±1% typically, for V_{DD}=5 V at C_X=1000 pF and R_X=5 kΩ.

These types are supplied in 16-lead hermetic dual-in-line ceramic packages (F3A suffix), 16-lead dual-in-line plastic packages (E suffix), 16-lead small-outline packages (M, M96, and MT suffixes), and 16-lead thin shrink small-outline packages (PW and PWR suffixes).

The CD4098B is similar to type MC14528.

Features:

- Retriggerable/resettable capability
- Trigger and reset propagation delays independent of R_X, C_X
- Triggering from leading or trailing edge
- Q and $\overline{Q}$ buffered outputs available
- Separate resets
- Wide range of output-pulse widths
- 100% tested for maximum quiescent current at 20 V
- Maximum input current of 1 μA at 18 V over full package-temperature range; 100 nA at 18 V and 25°C
- Noise margin (full package-temperature range): 1 V at V_{DD}= 5 V
  2 V at V_{DD}=10 V
  2.5 V at V_{DD}=15 V
- 5-V, 10-V, and 15-V parametric ratings
- Standardized, symmetrical output characteristics
- Meets all requirements of JEDEC **Tentative Standard No. 13B**, "Standard Specifications for Description of 'B' Series CMOS Devices."

Applications:

- Pulse delay and timing
- Pulse shaping
- Astable multivibrator

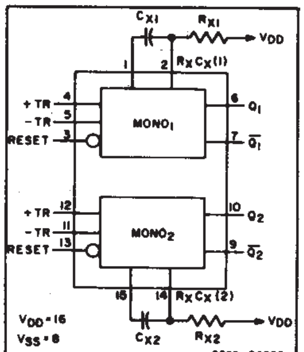

CD4098B
Functional Diagram

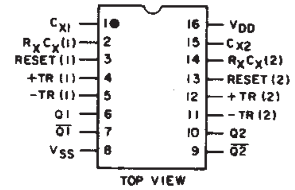

TERMINALS 1,8,15 ARE
ELECTRICALLY CONNECTED
INTERNALLY

92CS-24848R1

TERMINAL ASSIGNMENT

MAXIMUM RATINGS, ***Absolute-Maximum Values:***

DC SUPPLY-VOLTAGE RANGE, (V_{DD})	
Voltages referenced to V_{SS} Terminal)	−0.5V to +20V
INPUT VOLTAGE RANGE, ALL INPUTS	−0.5V to V_{DD} +0.5V
DC INPUT CURRENT, ANY ONE INPUT	±10mA
POWER DISSIPATION PER PACKAGE (P_D):	
For T_A = −55°C to +100°C	500mW
For T_A = +100°C to +125°C	Derate Linearity at 12mW/°C to 200mW
DEVICE DISSIPATION PER OUTPUT TRANSISTOR	
FOR T_A = FULL PACKAGE-TEMPERATURE RANGE (All Package Types)	100mW
OPERATING-TEMPERATURE RANGE (T_A)	−55°C to +125°C
STORAGE TEMPERATURE RANGE (T_{stg})	−65°C to +150°C
LEAD TEMPERATURE (DURING SOLDERING):	
At distance 1/16 ± 1/32 inch (1.59 ± 0.79mm) from case for 10s max	+265°C

RECOMMENDED OPERATING CONDITIONS

For maximum reliability, nominal operating conditions should be selected so that operation is always within the following ranges:

CHARACTERISTIC	V_{DD} V	LIMITS MIN.	LIMITS MAX.	UNITS
Supply-Voltage Range (For T_A = Full Package-Temperature Range)	–	3	18	V
Trigger Pulse Width t_W(TR)	5 10 15	140 60 40	– – –	ns
Reset Pulse Width t_W(R) (This is a function of C_X)	–	See Dynamic Char. Chart and Fig. 10		–
Trigger Rise or Fall Time t_r(TR), t_f(TR)	5 - 15	–	100	μs

TABLE I

CD4098B FUNCTIONAL TERMINAL CONNECTIONS

FUNCTION	V_{DD} TO TERM. NO.		V_{SS} TO TERM. NO.		INPUT PULSE TO TERM. NO.		OTHER CONNECTIONS	
	$MONO_1$	$MONO_2$	$MONO_1$	$MONO_2$	$MONO_1$	$MONO_2$	$MONO_1$	$MONO_2$
Leading-Edge Trigger/ Retriggerable	3, 5	11, 13			4	12		
Leading-Edge Trigger/ Non-retriggerable	3	13			4	12	5-7	11-9
Trailing-Edge Trigger/ Retriggerable	3	13	4	12	5	11		
Trailing-Edge Trigger/ Non-retriggerable	3	13			5	11	4-6	12-10
Unused Section	5	11	3, 4	12, 13				

NOTES:

1. A RETRIGGERABLE ONE-SHOT MULTIVIBRATOR HAS AN OUTPUT PULSE WIDTH WHICH IS EXTENDED ONE FULL TIME PERIOD (T_X) AFTER APPLICATION OF THE LAST TRIGGER PULSE.

   The minimum time between retriggering edges (or trigger and retrigger edges) is 40 per cent of (T_X).

2. A NON-RETRIGGERABLE ONE-SHOT MULTIVIBRATOR HAS A TIME PERIOD T_X REFERENCED FROM THE APPLICATION OF THE FIRST TRIGGER PULSE.

INPUT PULSE TRAIN

RETRIGGERABLE MODE PULSE WIDTH (+TR MODE)

NON-RETRIGGERABLE MODE PULSE WIDTH (+TR MODE)

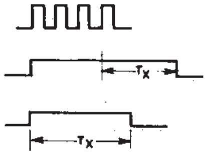

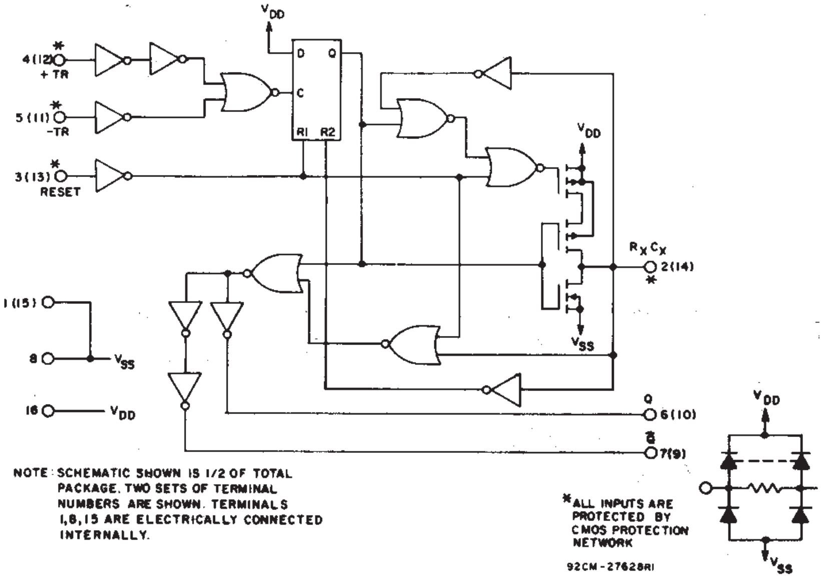

NOTE: SCHEMATIC SHOWN IS 1/2 OF TOTAL PACKAGE. TWO SETS OF TERMINAL NUMBERS ARE SHOWN. TERMINALS 1,8,15 ARE ELECTRICALLY CONNECTED INTERNALLY.

*ALL INPUTS ARE PROTECTED BY CMOS PROTECTION NETWORK

92CM-27628R1

Fig. 4 — CD4098B logic diagram.

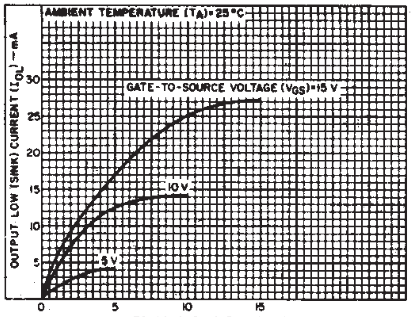

92CS-24318R3

Fig. 1 — Typical output low (sink) current characteristics.

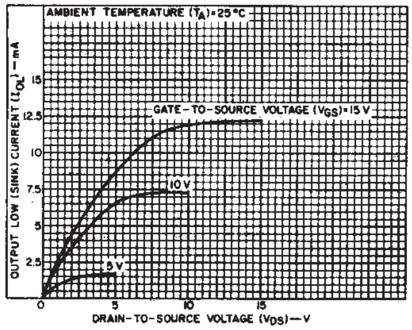

92CS-24319R1

Fig. 2 — Minimum output low (sink) current characteristics.

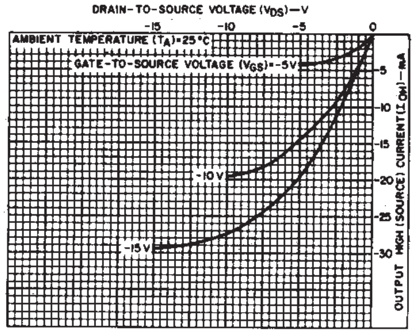

92CS-24320R3

Fig. 3 — Typical output high (source) current characteristics.

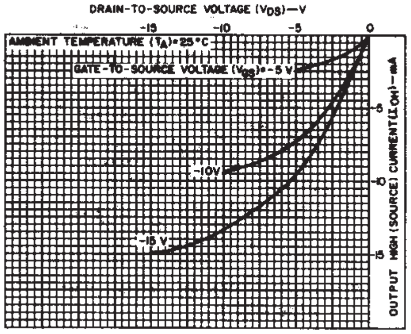

92CS-24321R2

Fig. 5 — Minimum output high (source) current characteristics.

STATIC ELECTRICAL CHARACTERISTICS

CHARACTERISTIC	CONDITIONS			LIMITS AT INDICATED TEMPERATURES (°C)							UNITS
	V_O (V)	V_{IN} (V)	V_{DD} (V)	−55	−40	+85	+125	+25 Min.	+25 Typ.	+25 Max.	
Quiescent Device Current I_{DD} Max.	–	0,5	5	1	1	30	30	–	0.02	1	μA
	–	0,10	10	2	2	60	60	–	0.02	2	
	–	0,15	15	4	4	120	120	–	0.02	4	
	–	0,20	20	20	20	600	600	–	0.04	20	
Output Low (Sink) Current, I_{OL} Min.	0.4	0,5	5	0.64	0.61	0.42	0.36	0.51	1	–	mA
	0.5	0,10	10	1.6	1.5	1.1	0.9	1.3	2.6	–	
	1.5	0,15	15	4.2	4	2.8	2.4	3.4	6.8	–	
Output High (Source) Current, I_{OH} Min.	4.6	0,5	5	−0.64	−0.61	−0.42	−0.36	−0.51	−1	–	
	2.5	0,5	5	−2	−1.8	−1.3	−1.15	−1.6	−3.2	–	
	9.5	0,10	10	−1.6	−1.5	−1.1	−0.9	−1.3	−2.6	–	
	13.5	0,15	15	−4.2	−4	−2.8	−2.4	−3.4	−6.8	–	
Output Voltage: Low-Level, V_{OL} Max.	–	0,5	5	0.05				–	0	0.05	V
	–	0,10	10	0.05				–	0	0.05	
	–	0,15	15	0.05				–	0	0.05	
Output Voltage: High-Level, V_{OH} Min.	–	0,5	5	4.95				4.95	5	–	
	–	0,10	10	9.95				9.95	10	–	
	–	0,15	15	14.95				14.95	15	–	
Input Low Voltage, V_{IL} Max.	0.5,4.5	–	5	1.5				–	–	1.5	V
	1,9	–	10	3				–	–	3	
	1.5,13.5	–	15	4				–	–	4	
Input High Voltage, V_{IH} Min.	0.5,4.5	–	5	3.5				3.5	–	–	
	1,9	–	10	7				7	–	–	
	1.5,13.5	–	15	11				11	–	–	
Input Current, I_{IN} Max.	–	0,18	18	±0.1	±0.1	±1	±1	–	$\pm10^{-5}$	±0.1	μA
Output Leakage I_{OUT} Max.	0,18	0,18	18	±0.4	±0.4	±12	±12	–	$\pm10^{-4}$	±0.4	μA

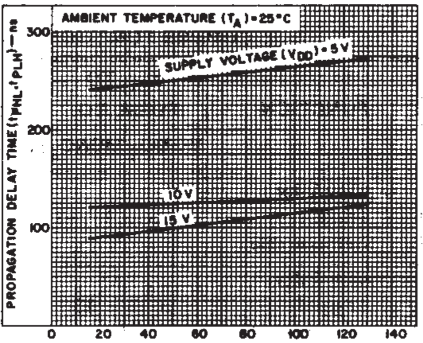

Fig. 6 – Typical propagation delay time vs. load capacitance, trigger into Q out. (All values of C_X and R_X.)

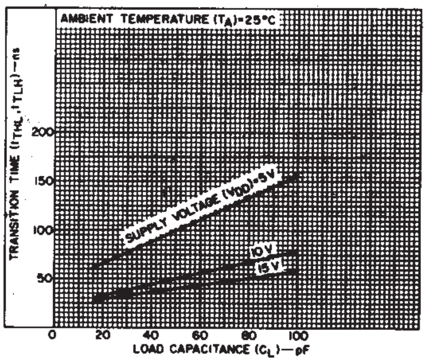

Fig. 7 – Transition time vs. load capacitance for R_X = 5 kΩ-10000 kΩ and C_X = 15 pF-10000 pF.

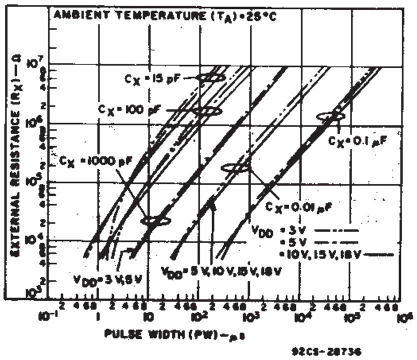

Fig. 8 – Typical external resistance vs. pulse width.

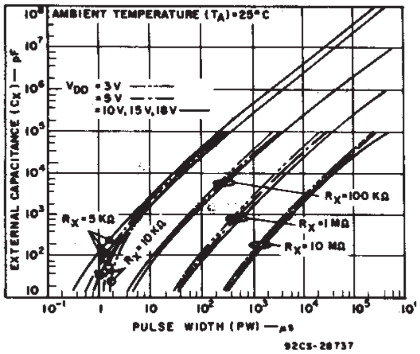

Fig. 9 – Typical external capacitance vs. pulse width.

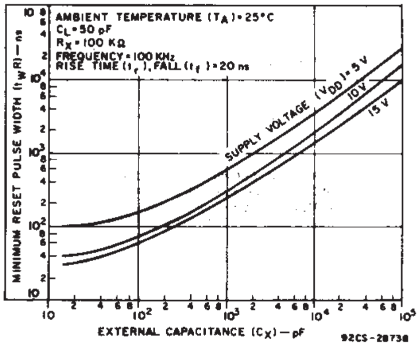

Fig. 10 – Typical minimum reset pulse width vs. external capacitance.

DYNAMIC ELECTRICAL CHARACTERISTICS

At $T_A = 25°C$; Input $t_r, t_f = 20$ ns, $C_L = 50$ pF, $R_L = 200$ kΩ

CHARACTERISTIC	TEST CONDITIONS			LIMITS		UNITS
	R_X (kΩ)	C_X (pF)	V_{DD} (V)	Typ.	Max.	
Trigger Propagation Delay Time +TR, −TR to Q, $\overline{Q}$ t_{PHL}, t_{PLH}	5 to 10,000	≥15	5	250	500	ns
			10	125	250	
			15	100	200	
Minimum Trigger Pulse Width, t_{WH}, t_{WL}	5 to 10,000	≥15	5	70	140	ns
			10	30	60	
			15	20	40	
Transition Time, t_{TLH}	5 to 10,000	≥15	5	100	200	ns
			10	50	100	
			15	40	80	
t_{THL}	5 to 10,000	15 to 10,000	5	100	200	
			10	50	100	
			15	40	80	
	5 to 10,000	0.01 μF to 0.1 μF	5	150	300	
			10	75	150	
			15	65	130	
	5 to 10,000	0.1 μF to 1 μF	5	250	500	
			10	150	300	
			15	80	160	
Reset Propagation Delay Time, T_{PHL}, T_{PLH}	5 to 10,000	≥15	5	225	450	ns
			10	125	250	
			15	75	150	
Minimum Reset Pulse Width, t_{WR}	100	15	5	100	200	ns
			10	40	80	
			15	30	60	
		1000	5	600	1200	
			10	300	600	
			15	250	500	
		0.1 μF	5	25	50	μs
			10	15	30	
			15	10	20	
Trigger Rise or Fall Time t_r(TR), t_f(TR)	–	–	5 to 15	–	100	μs
Pulse Width Match Between Circuits in Same Package	10	10,000	5	5	10	%
			10	7.5	15	
			15	7.5	15	
Input Capacitance, C_{IN}	Any Input			5	7.5	pF

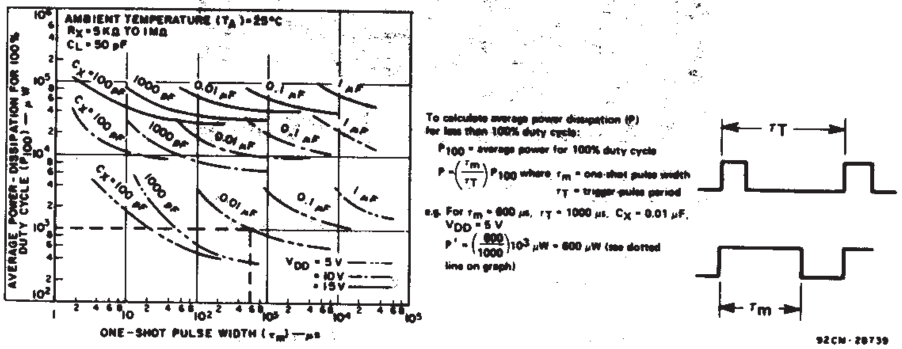

To calculate average power dissipation (P) for less than 100% duty cycle:

P_{100} = average power for 100% duty cycle

$P = \left(\frac{τ_m}{τ_T}\right) P_{100}$ where $τ_m$ = one-shot pulse width
$τ_T$ = trigger-pulse period

e.g. For $τ_m$ = 600 μs, $τ_T$ = 1000 μs, C_X = 0.01 μF, V_{DD} = 5 V
$P' = \left(\frac{600}{1000}\right) 10^3$ μW = 600 μW (see dotted line on graph)

Fig. 11 — Average power dissipation vs. one-shot pulse width.

TEST CIRCUITS

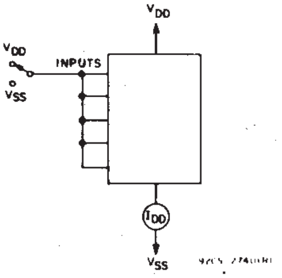
V_{DD}
V_{DD}
INPUTS
V_{SS}
I_{DD}
V_{SS}
92CS-27401R1

Fig. 12 — Quiescent-device-current test circuits.

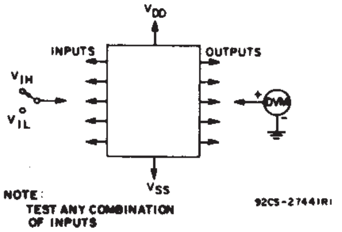
V_{DD}
INPUTS
OUTPUTS
V_{IH}
V_{IL}
DVM
V_{SS}
NOTE:
TEST ANY COMBINATION OF INPUTS
92CS-27441R1

Fig. 13 — Input-voltage test circuit.

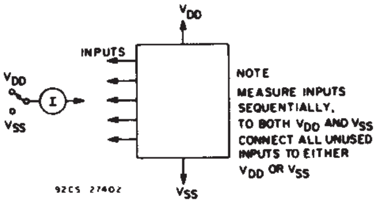
V_{DD}
INPUTS
V_{DD}
I
V_{SS}
NOTE
MEASURE INPUTS SEQUENTIALLY,
TO BOTH V_{DD} AND V_{SS}
CONNECT ALL UNUSED INPUTS TO EITHER V_{DD} OR V_{SS}
92CS 27402
V_{SS}

Fig. 14 — Input leakage current test circuit.

APPLICATIONS

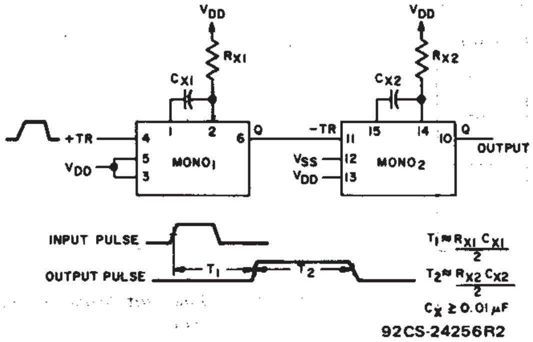
VDD
RX1
CX1
+TR
VDD
4
5
3
1
2
6
Q
MONO1
VDD
RX2
CX2
−TR
VSS
VDD
11
12
13
15
14
10
Q
MONO2
OUTPUT
INPUT PULSE
OUTPUT PULSE
T1
T2
T1 ≈ RX1 CX1 / 2
T2 ≈ RX2 CX2 / 2
CX ≥ 0.01 µF
92CS-24256R2

Fig. 15 – Pulse delay.

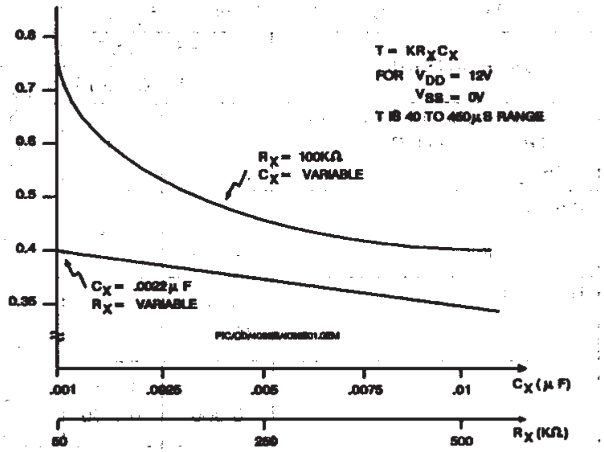

Fig. 17 – K-Factor for V_{DD} = 12V.

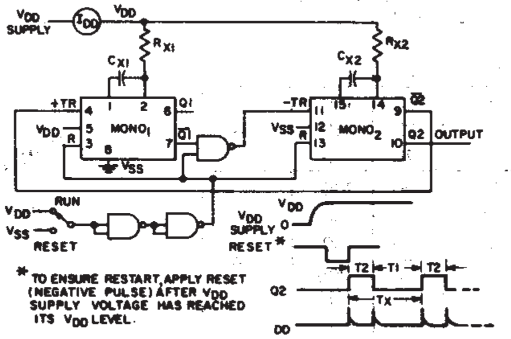
VDD SUPPLY
IDD
VDD
RX1
CX1
+TR
VDD
R
4
5
3
1
2
6
7
8
Q1
Q̄1
MONO1
VSS
RX2
CX2
−TR
VSS
R
11
12
13
15
14
9
10
Q̄2
Q2
MONO2
OUTPUT
RUN
VDD
VSS
RESET
VDD
VDD SUPPLY
0
RESET *
T2
T1
T2
Q2
TX
DD

* TO ENSURE RESTART, APPLY RESET (NEGATIVE PULSE) AFTER V_{DD} SUPPLY VOLTAGE HAS REACHED ITS V_{DD} LEVEL.

I_{DD}, T_X vs. R_X

R_X	I_{DD} (Avg.)	T_X (T1 + T2)	V_{DD}
10 kΩ ↓	1 mA ↓ 0.05 mA	3.8 µs ↓ 0.5 s	5 V
	2.5 mA ↓ 0.5 mA	3.2 µs ↓ 0.5 s	10 V
10 MΩ	5 mA ↓ 1 mA	3 µs ↓ 0.5 s	15 V

Note:
All values are typical.
C_X range: 0.0001 µF to 0.1 µF.

92CM-28740

Fig. 16 – Astable multivibrator with restart after reset capability.

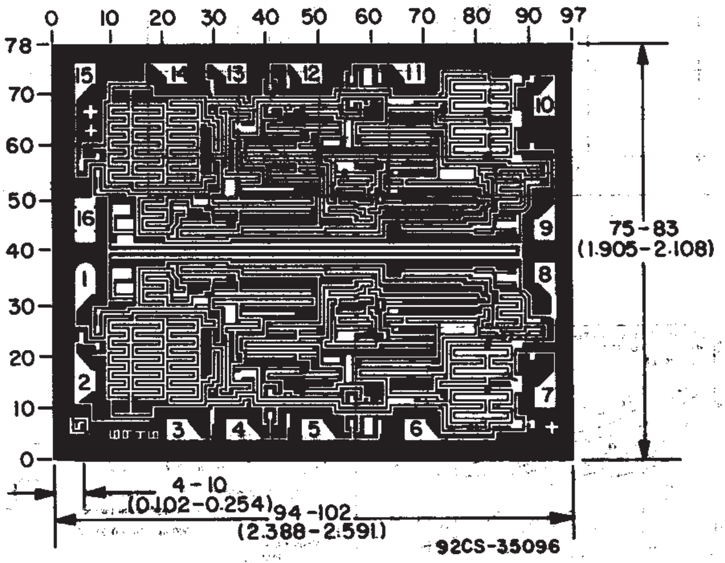
0
10
20
30
40
50
60
70
80
90
97
78
70
60
50
40
30
20
10
0
15
14
13
12
11
10
16
9
1
8
2
7
3
4
5
6
75−83
(1.905−2.108)
4−10
(0.102−0.254)
94−102
(2.388−2.591)
92CS-35096

Dimensions and Pad Layout for CD4098BH

Dimensions in parentheses are in millimeters and are derived from the basic inch dimensions as indicated. Grid graduations are in mils (10^{-3} inch).

J (R–GDIP–T**) CERAMIC DUAL IN–LINE PACKAGE

14 LEADS SHOWN

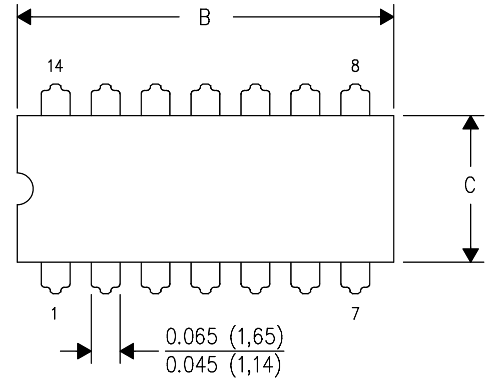

B
14
8
C
1
7
0.065 (1,65)
0.045 (1,14)

PINS ** / DIM	14	16	18	20
A	0.300 (7,62) BSC	0.300 (7,62) BSC	0.300 (7,62) BSC	0.300 (7,62) BSC
B MAX	0.785 (19,94)	.840 (21,34)	0.960 (24,38)	1.060 (26,92)
B MIN	——	——	——	——
C MAX	0.300 (7,62)	0.300 (7,62)	0.310 (7,87)	0.300 (7,62)
C MIN	0.245 (6,22)	0.245 (6,22)	0.220 (5,59)	0.245 (6,22)

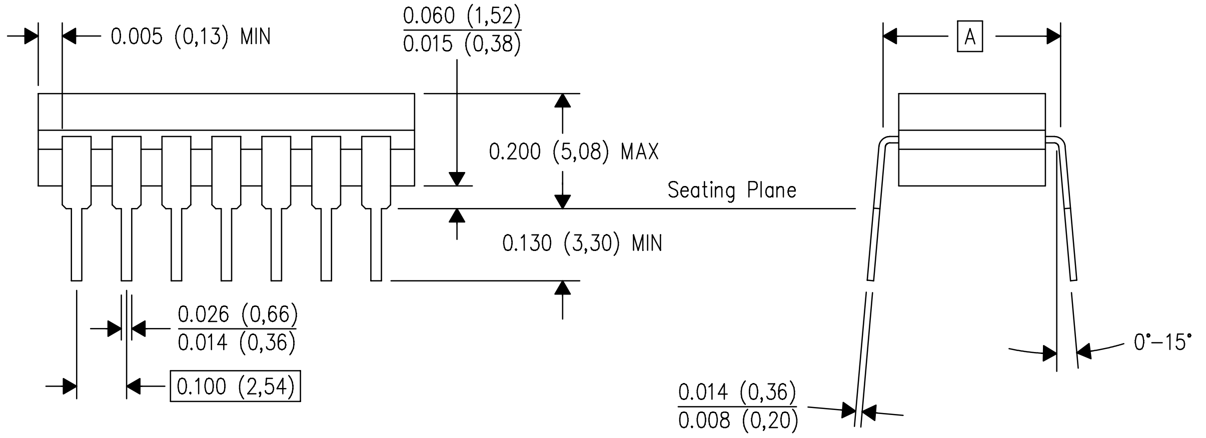

0.005 (0,13) MIN
0.060 (1,52)
0.015 (0,38)
A
0.200 (5,08) MAX
Seating Plane
0.130 (3,30) MIN
0.026 (0,66)
0.014 (0,36)
0.100 (2,54)
0°–15°
0.014 (0,36)
0.008 (0,20)

4040083/F 03/03

NOTES:
- A. All linear dimensions are in inches (millimeters).
- B. This drawing is subject to change without notice.
- C. This package is hermetically sealed with a ceramic lid using glass frit.
- D. Index point is provided on cap for terminal identification only on press ceramic glass frit seal only.
- E. Falls within MIL STD 1835 GDIP1–T14, GDIP1–T16, GDIP1–T18 and GDIP1–T20.

N (R-PDIP-T**) PLASTIC DUAL-IN-LINE PACKAGE

16 PINS SHOWN

DIM \ PINS **	14	16	18	20
A MAX	0.775 (19,69)	0.775 (19,69)	0.920 (23,37)	1.060 (26,92)
A MIN	0.745 (18,92)	0.745 (18,92)	0.850 (21,59)	0.940 (23,88)
MS-100 VARIATION	AA	BB	AC	AD

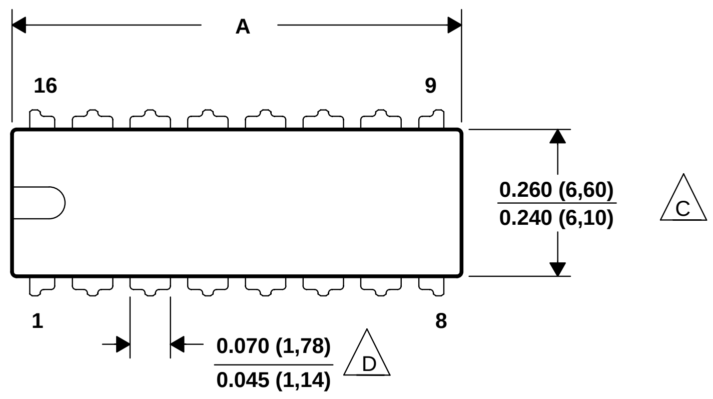
A
16
9
1
8
0.260 (6,60)
0.240 (6,10)
C
0.070 (1,78)
0.045 (1,14)
D

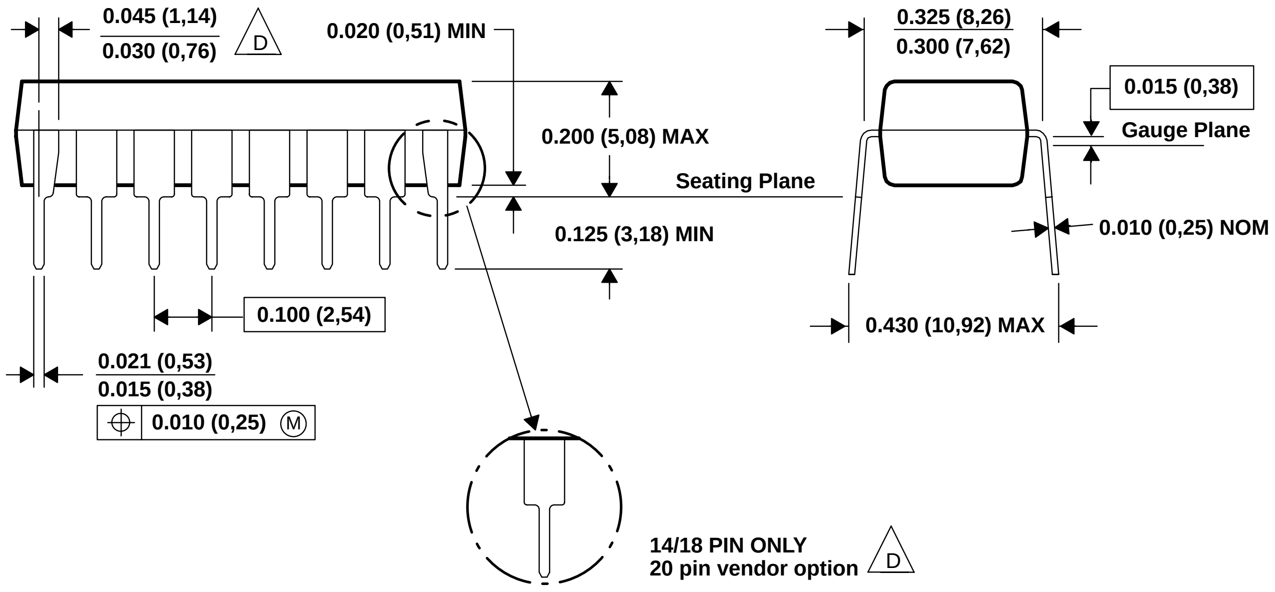
0.045 (1,14)
0.030 (0,76)
D
0.020 (0,51) MIN
0.200 (5,08) MAX
Seating Plane
0.125 (3,18) MIN
0.100 (2,54)
0.021 (0,53)
0.015 (0,38)
⌖ 0.010 (0,25) Ⓜ
0.325 (8,26)
0.300 (7,62)
0.015 (0,38)
Gauge Plane
0.010 (0,25) NOM
0.430 (10,92) MAX
14/18 PIN ONLY
20 pin vendor option
D

4040049/E 12/2002

NOTES:
- A. All linear dimensions are in inches (millimeters).
- B. This drawing is subject to change without notice.
- C. Falls within JEDEC MS-001, except 18 and 20 pin minimum body lrngth (Dim A).
- D. The 20 pin end lead shoulder width is a vendor option, either half or full width.

D (R-PDSO-G**) PLASTIC SMALL-OUTLINE PACKAGE

8 PINS SHOWN

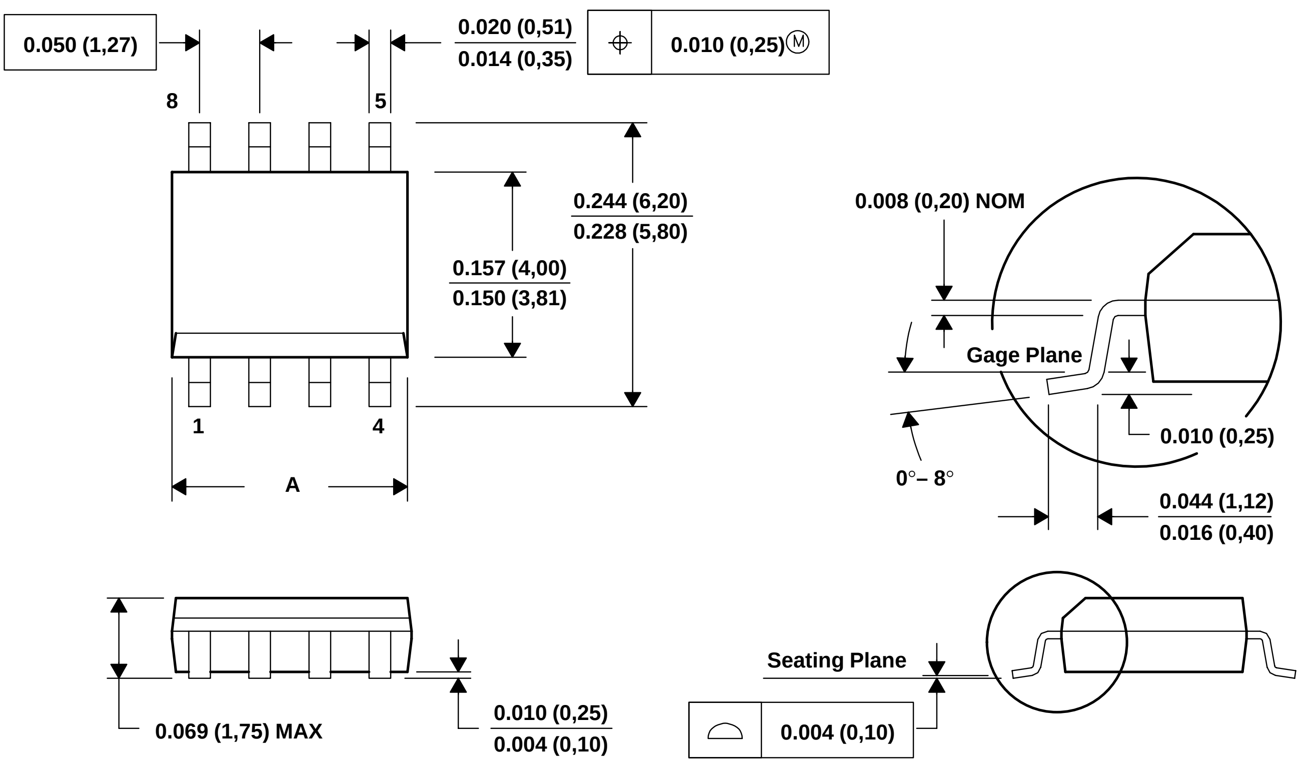
0.050 (1,27)
0.020 (0,51)
0.014 (0,35)
0.010 (0,25)Ⓜ
8
5
1
4
A
0.244 (6,20)
0.228 (5,80)
0.157 (4,00)
0.150 (3,81)
0.008 (0,20) NOM
Gage Plane
0.010 (0,25)
0°– 8°
0.044 (1,12)
0.016 (0,40)
Seating Plane
0.069 (1,75) MAX
0.010 (0,25)
0.004 (0,10)
0.004 (0,10)

PINS ** DIM	8	14	16
A MAX	0.197 (5,00)	0.344 (8,75)	0.394 (10,00)
A MIN	0.189 (4,80)	0.337 (8,55)	0.386 (9,80)

4040047/E 09/01

NOTES:
- A. All linear dimensions are in inches (millimeters).
- B. This drawing is subject to change without notice.
- C. Body dimensions do not include mold flash or protrusion, not to exceed 0.006 (0,15).
- D. Falls within JEDEC MS-012

PW (R-PDSO-G)** **PLASTIC SMALL-OUTLINE PACKAGE**

14 PINS SHOWN

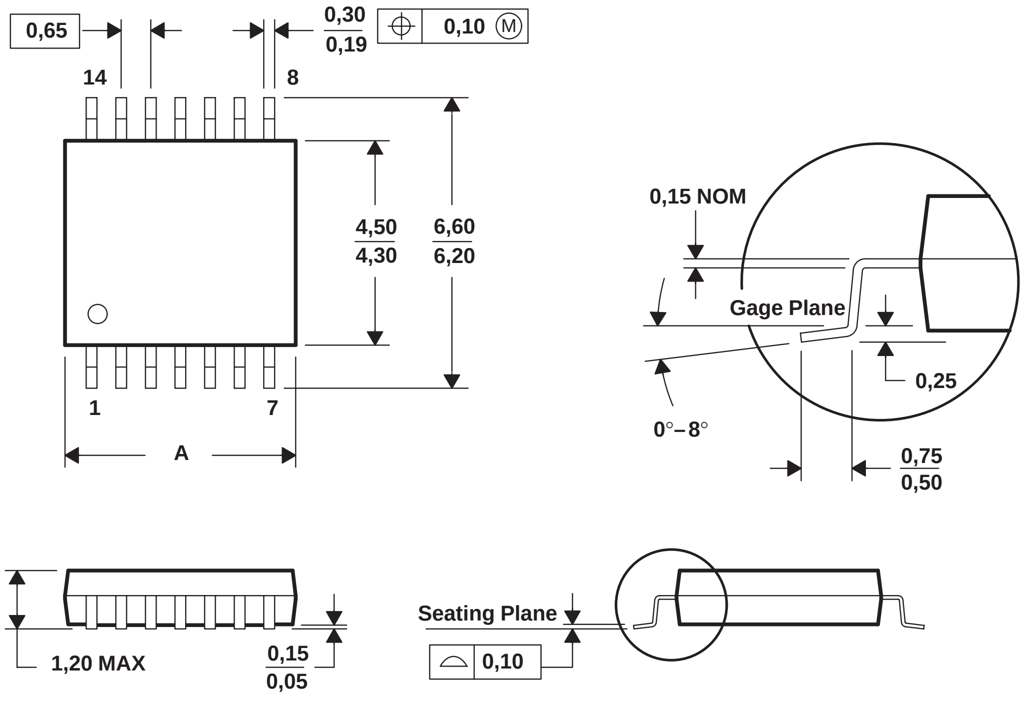
0,65
0,30
0,19
0,10 M
14
8
4,50
4,30
6,60
6,20
1
7
A
0,15 NOM
Gage Plane
0,25
0°–8°
0,75
0,50
1,20 MAX
0,15
0,05
Seating Plane
0,10

PINS ** DIM	8	14	16	20	24	28
A MAX	3,10	5,10	5,10	6,60	7,90	9,80
A MIN	2,90	4,90	4,90	6,40	7,70	9,60

4040064/F 01/97

NOTES:
- A. All linear dimensions are in millimeters.
- B. This drawing is subject to change without notice.
- C. Body dimensions do not include mold flash or protrusion not to exceed 0,15.
- D. Falls within JEDEC MO-153

IMPORTANT NOTICE

Texas Instruments Incorporated and its subsidiaries (TI) reserve the right to make corrections, modifications, enhancements, improvements, and other changes to its products and services at any time and to discontinue any product or service without notice. Customers should obtain the latest relevant information before placing orders and should verify that such information is current and complete. All products are sold subject to TI's terms and conditions of sale supplied at the time of order acknowledgment.

TI warrants performance of its hardware products to the specifications applicable at the time of sale in accordance with TI's standard warranty. Testing and other quality control techniques are used to the extent TI deems necessary to support this warranty. Except where mandated by government requirements, testing of all parameters of each product is not necessarily performed.

TI assumes no liability for applications assistance or customer product design. Customers are responsible for their products and applications using TI components. To minimize the risks associated with customer products and applications, customers should provide adequate design and operating safeguards.

TI does not warrant or represent that any license, either express or implied, is granted under any TI patent right, copyright, mask work right, or other TI intellectual property right relating to any combination, machine, or process in which TI products or services are used. Information published by TI regarding third-party products or services does not constitute a license from TI to use such products or services or a warranty or endorsement thereof. Use of such information may require a license from a third party under the patents or other intellectual property of the third party, or a license from TI under the patents or other intellectual property of TI.

Reproduction of information in TI data books or data sheets is permissible only if reproduction is without alteration and is accompanied by all associated warranties, conditions, limitations, and notices. Reproduction of this information with alteration is an unfair and deceptive business practice. TI is not responsible or liable for such altered documentation.

Resale of TI products or services with statements different from or beyond the parameters stated by TI for that product or service voids all express and any implied warranties for the associated TI product or service and is an unfair and deceptive business practice. TI is not responsible or liable for any such statements.

Following are URLs where you can obtain information on other Texas Instruments products and application solutions:

Products		**Applications**	
Amplifiers	amplifier.ti.com	Audio	www.ti.com/audio
Data Converters	dataconverter.ti.com	Automotive	www.ti.com/automotive
DSP	dsp.ti.com	Broadband	www.ti.com/broadband
Interface	interface.ti.com	Digital Control	www.ti.com/digitalcontrol
Logic	logic.ti.com	Military	www.ti.com/military
Power Mgmt	power.ti.com	Optical Networking	www.ti.com/opticalnetwork
Microcontrollers	microcontroller.ti.com	Security	www.ti.com/security
		Telephony	www.ti.com/telephony
		Video & Imaging	www.ti.com/video
		Wireless	www.ti.com/wireless

Mailing Address: Texas Instruments
Post Office Box 655303 Dallas, Texas 75265